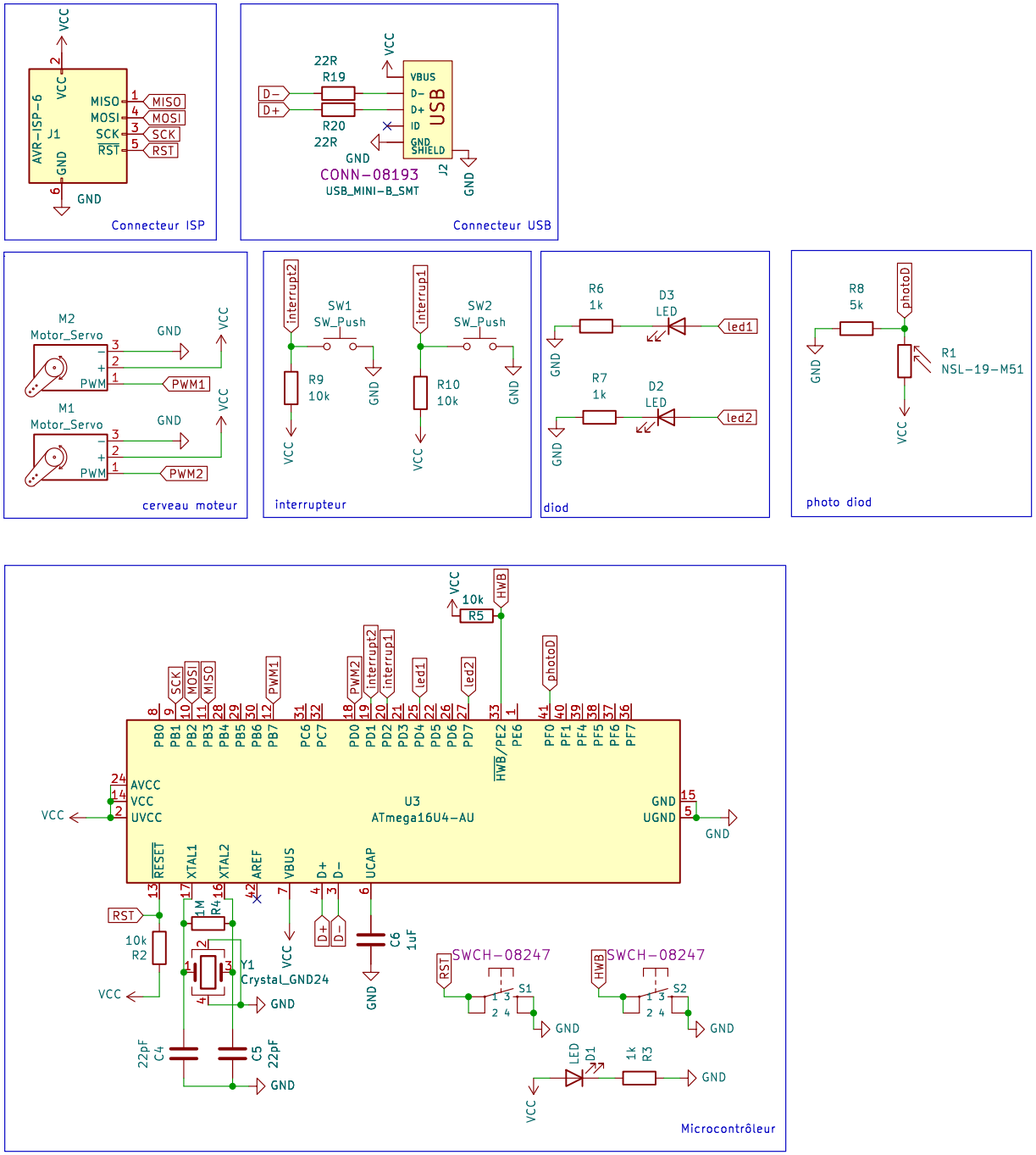

Sheet: /
File: SE2a4-cscreen.kicad_sch

Title: Manette SE3

Size: A4	Date:	Rev:
KiCad E.D.A. kicad 7.0.8		Id: 1/1